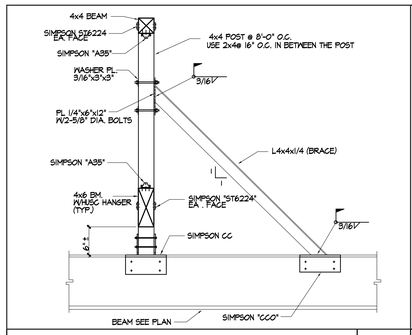

30

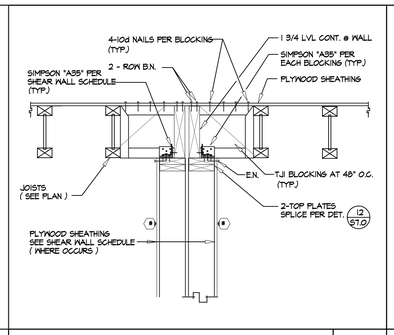

SHEAR TRANSFER 25

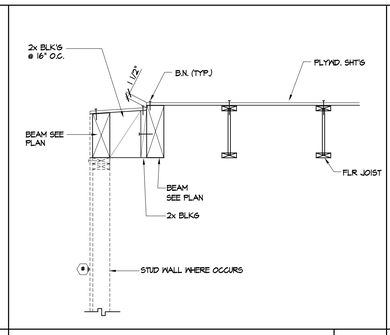

DETAIL 20

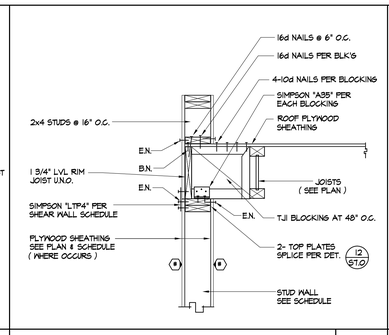

SHEAR TRANSFER 15

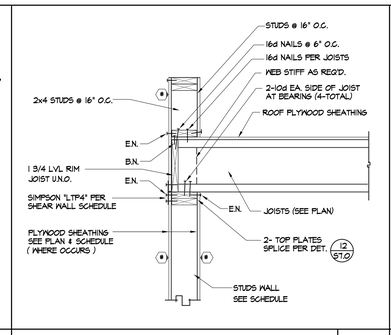

SHEAR TRANSFER 10

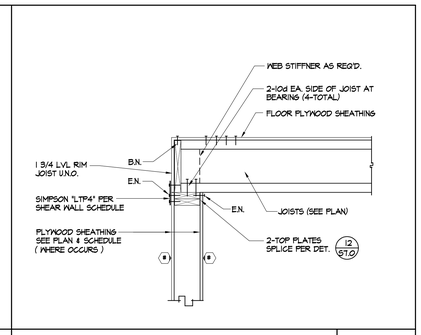

SHEAR TRANSFER 5

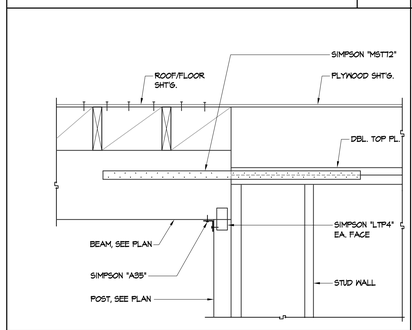

29

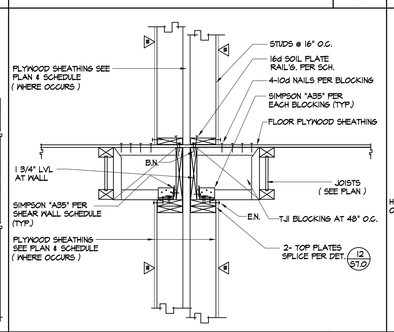

DETAIL 24

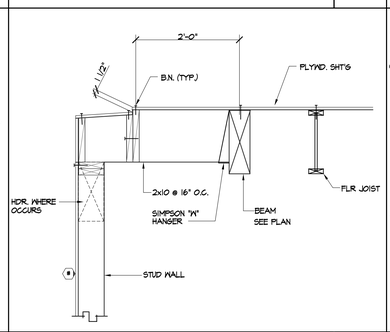

DETAIL 19

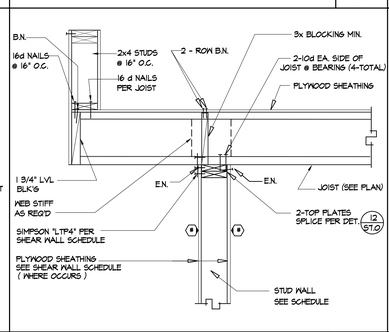

SHEAR TRANSFER 14

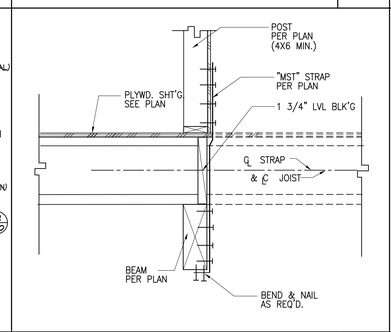

DETAIL 9

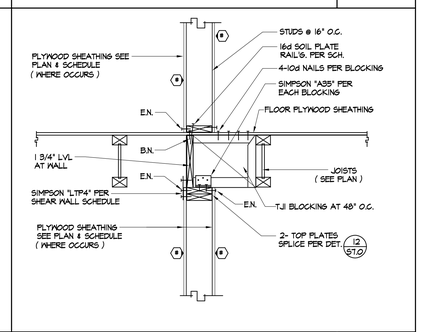

SHEAR TRANSFER 4

DETAIL 28

DETAIL 23

DETAIL 18

HANGER SCHEDULE	
MEMBER	HANGER TYPE (SIMPSON
TJI560 & 360	MIT
TJI230 & 210 & 110	ITT
1 3/4 LVL	WP
3 1/2, 5 1/4, 7" PSL	HSLTV

W-017A

FLR./ ROOF JOIST TO BEAM CONNECTION 13

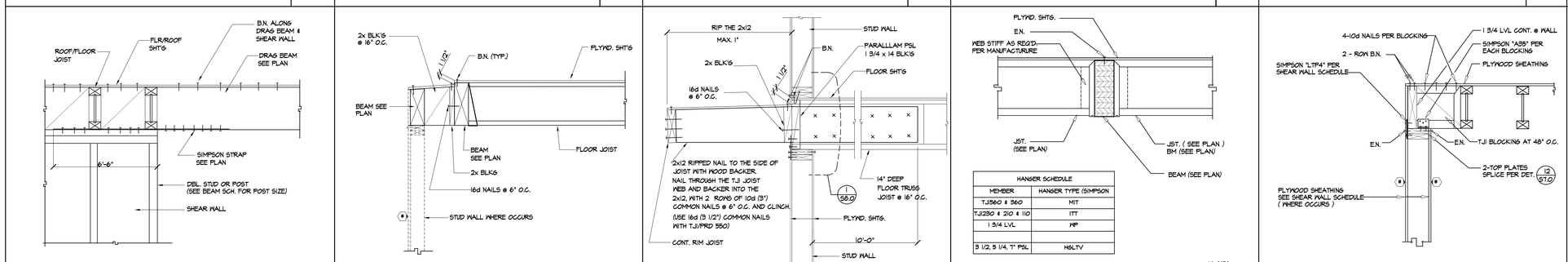

SHEAR TRANSFER 8

SHEAR TRANSFER 3

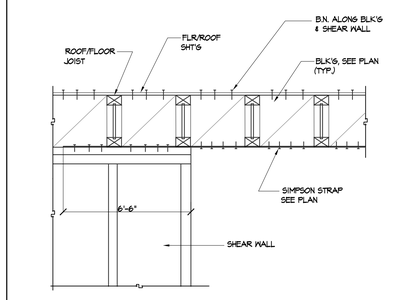

DETAIL 27

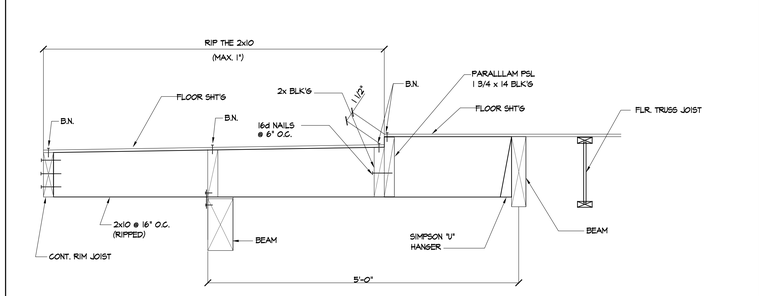

DETAIL 17

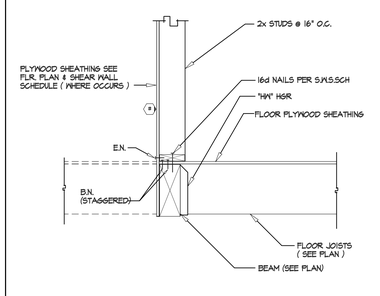

W-039

SHEAR TRANSFER 12

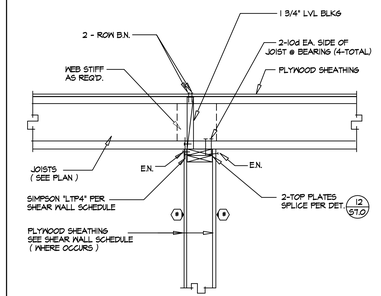

SHEAR TRANSFER 7

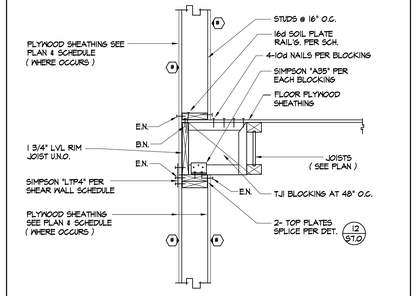

SHEAR TRANSFER 2

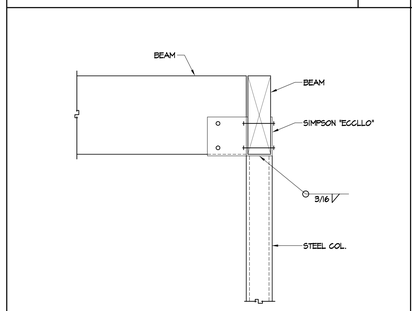

DETAIL 26

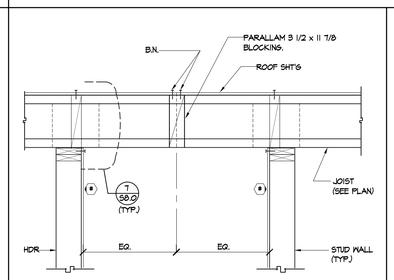

DETAIL 21

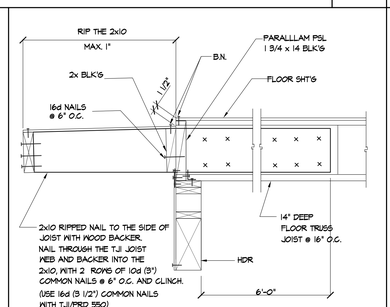

DETAIL 16

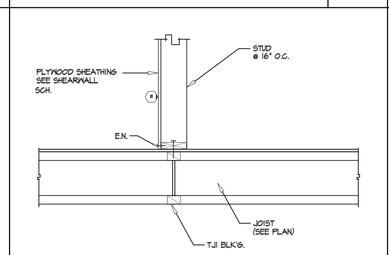

W-038B

SHEAR TRANSFER 11

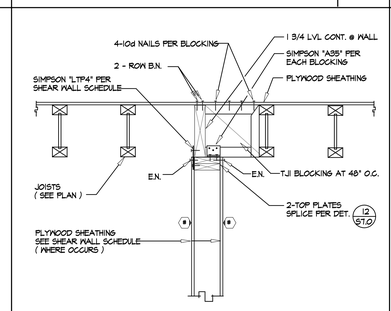

SHEAR TRANSFER 6

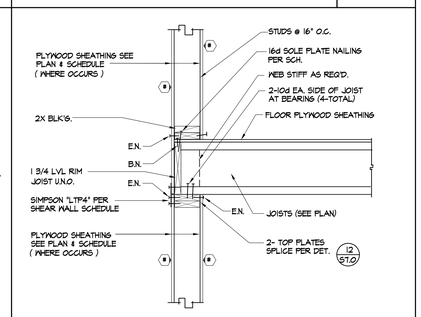

SHEAR TRANSFER 1

ALL DRAWINGS AND WRITTEN MATERIAL APPEARING HEREIN CONSTITUTE THE ORIGINAL AND UNPUBLISHED WORK OF THE ARCHITECT AND THE SAME MAY NOT BE DUPLICATED, USED OR DISCLOSED WITHOUT THE WRITTEN CONSENT OF THE ARCHITECT.

j&g architecture
15 HUBBLE IRVINE CALIFORNIA 92618
(949) 752-9333
FAX (949) 752-1207

CIVIL STRUCTURAL DESIGN
TILDIN ENGINEERING
26501 Rancho Pkwy., Ste. 203
Lake Forest, CA 92630
Telephone: (949) 421-0144
FAX No.: (949) 421-0143
TILDIN JOB No. 2004-61

Saticoy Realty Investments, LLC
LOS ANGELES, CALIFORNIA

APARTMENT BUILDING
20223-20237 W. SATICOY STREET
WINNETKA, CALIFORNIA

DETAILS

DATE:	7-28-06
DRAWN BY:	TEAM
J&G NO.	030703
SCALE:	AS NOTED
SHEET	

S8.0