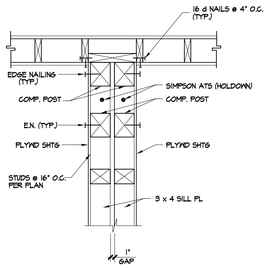

DETAIL 30

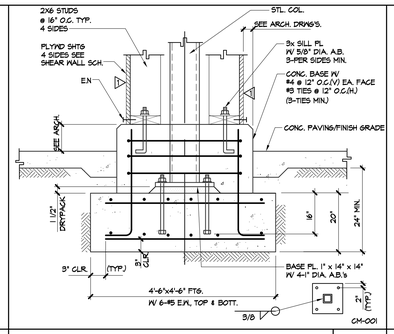

DETAIL 25

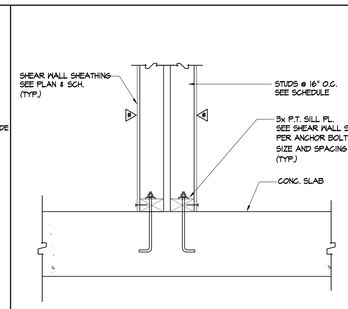

DETAIL 20

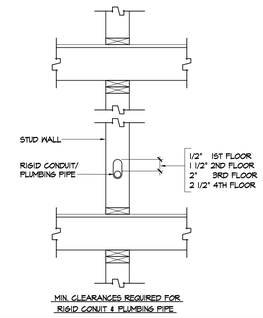

DETAIL 15

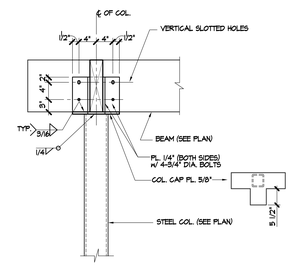

DETAIL 29

"ATS" HOLDOWN SCHEDULE

TYPE	1ST FLOOR		2ND FLOOR		3RD FLOOR		4TH FLOOR	
HOLDOWN TYPE	ALLOW. UPLIFT (kips)	COMP. POSTS ** *	ALLOW. UPLIFT (kips)	COMP. POSTS ** *	ALLOW. UPLIFT (kips)	COMP. POSTS ** *	ALLOW. UPLIFT (kips)	COMP. POSTS ** *
TDS 15	15.2	2-4x6	-	-	-	-	-	-
TDS 37	24.0	2-4x10	17.5	2-4x6	12.2	4-3x4	-	-
TDS 44	15.3	2-4x6	11.6	2-4x4	5.42	2-3x4	3.8	2-3x4
TDS 45	19.2	2-4x8	15.1	4-3x4	8.5	2-4x4	5.92	2-3x4
TDS 47	24.0	2-4x10	17.5	2-4x6	12.2	2-4x4	5.92	2-3x4
TDS 25	19.2	2-4x8	11.6	2-4x6	-	-	-	-

NOTES:
1) RE-TIGHTEN ALL ATS BOLTS & HD SYSTEM IMMEDIATELY PRIOR TO COVERING WALL TYP. @ ALL SHEARWALL HOLD DEVICES.
2) TAKE UP DEVICE REQUIRED @ ALL ATS & HD SYSTEMS @ ALL FLOORS
3) ALL POSTS SHALL BE D.F. #1

DETAIL 24

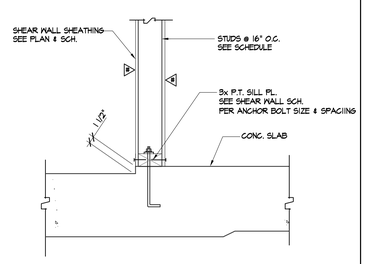

DETAIL 19

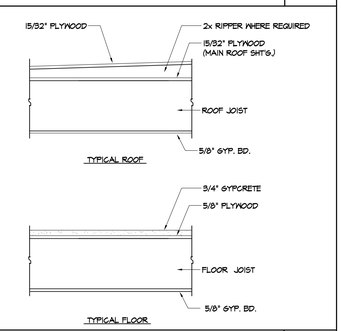

TYP. FLOOR & ROOF ASSEMBLY 14

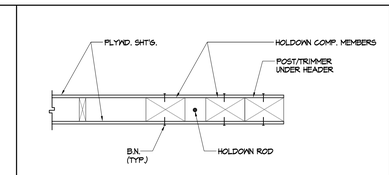

PLAN VIEW

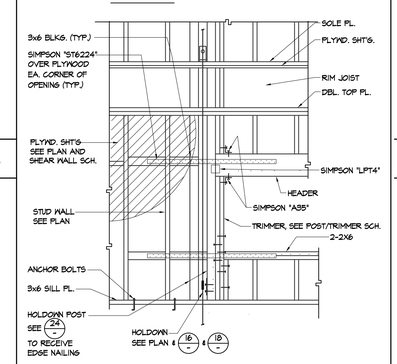

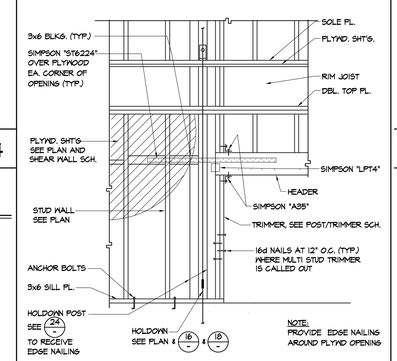

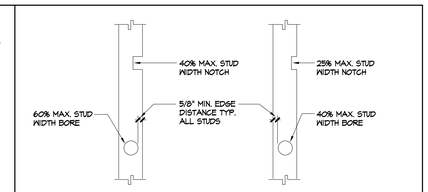

NOTE:
BORING & NOTCHING NOT TO OCCUR IN SAME STUD.

NOTCH/BORE % OF STUD	2x4	2x6
25%	7/8"	1 3/8"
40%	1 3/8"	2 1/8"
60%	2"	3 1/4"

WT-006

DRILL'G. & NOTCH'G. OF WD. STUDS 5

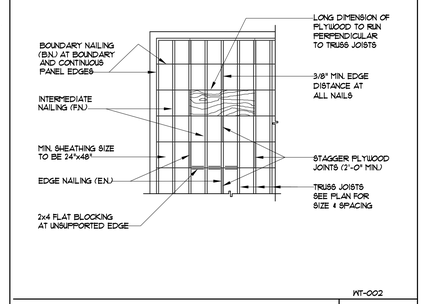

WT-002

NON-PANELIZED ROOF PLYWD. SHTG. 4

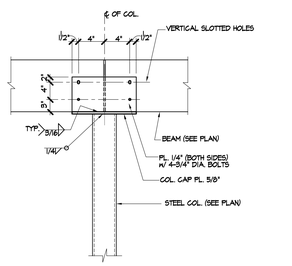

DETAIL 28

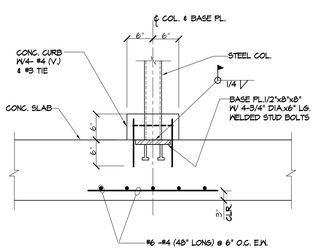

DETAIL 23

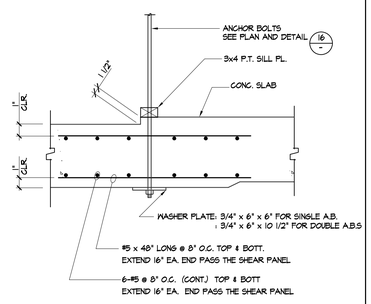

ANCHOR TIEDOWN DETAIL 18

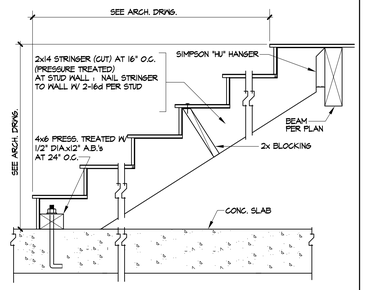

WOOD STAIR 13

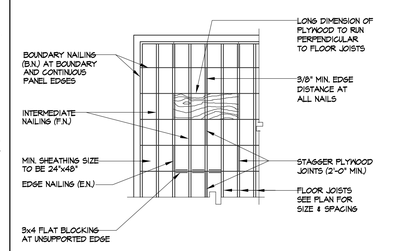

WT-004

FLOOR PLYWOOD SHEATHING 3

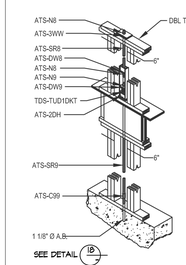

NOTES:
1) FOR LUMBER SIZE AND CAPACITY, SEE DETAIL 24
2) FOR TYP. ELEV. & PLAN, SEE DETAIL 8

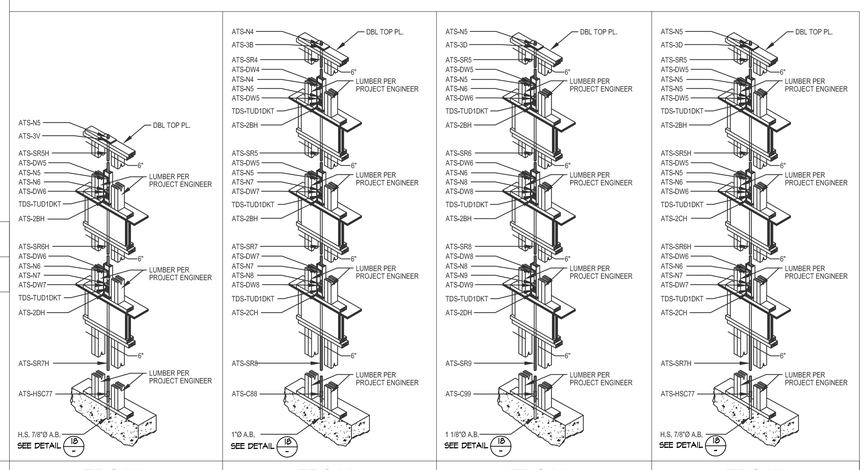

SIMP.ID	TDS25	TDS15	TDS37	TDS44	TDS45	TDS47
TYPE	AT25	AT15	AT37	AT44	AT45	AT47

ANCHOR TIEDOWNS 16

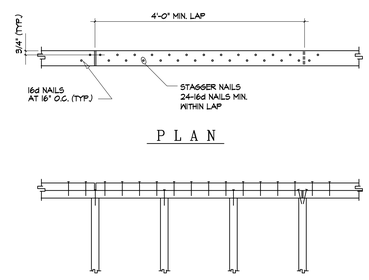

STUD WALL TOP PLATES SPLICE 12

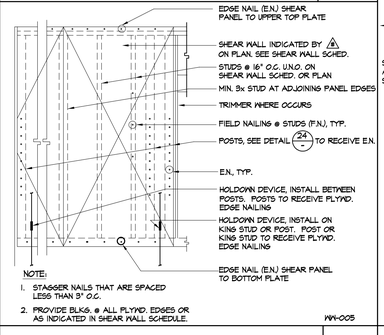

NOTE:
1. STAGGER NAILS THAT ARE SPACED LESS THAN 3" O.C.
2. PROVIDE BLKG. @ ALL PLYWD. EDGES OR AS INDICATED IN SHEAR WALL SCHEDULE.

W-005

TYPICAL SHEAR WALL FRAMING 11

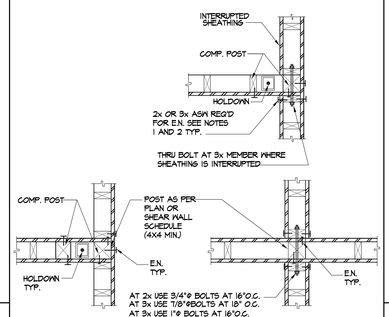

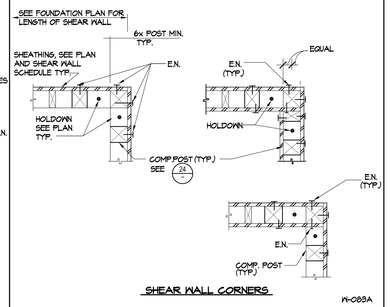

TYP. SHEAR WALL CORNERS & INTERSECTIONS 6

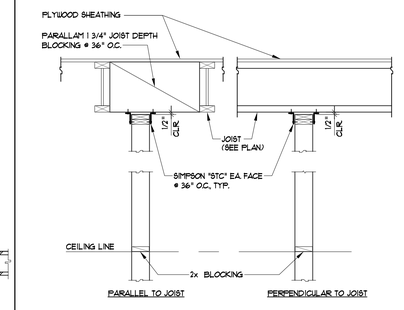

NON-LOAD BEARING WALL CONN. 2

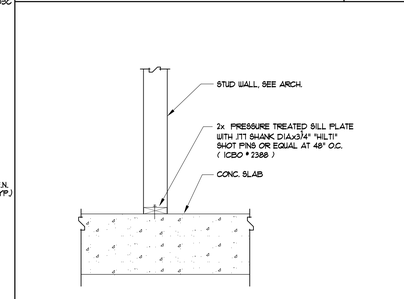

INTERIOR PARTITION WALL BASE 1

ALL DRAWINGS AND WRITTEN MATERIAL APPEARING HEREIN CONSTITUTE THE ORIGINAL AND UNPUBLISHED WORK OF THE ARCHITECT AND THE SAME MAY NOT BE DUPLICATED, USED OR DISCLOSED WITHOUT THE WRITTEN CONSENT OF THE ARCHITECT.

jag architecture
15 HUBBLE IRVINE CALIFORNIA 92618
(949) 752-9333
FAX (949) 752-1207

CIVIL STRUCTURAL DESIGN
TILDIN ENGINEERING
26501 Rancho Pkwy., Ste. 203
Lake Forest, CA 92630
Telephone: (949) 421-0144
FAX No.: (949) 421-0143
TILDIN JOB No. 2004-61

Saticoy Realty Investments, LLC
LOS ANGELES, CALIFORNIA

APARTMENT BUILDING
20223-20237 W. SATICOY STREET
WINNETKA, CALIFORNIA

GENERAL DETAILS

DATE: 7-28-06
DRAWN BY: TEAM
J&G NO. 030703
SCALE: AS NOTED
SHEET
S7.0