## HEAT PUMP FAN COIL UNIT SCHEDULE

| SYMBOL | MANUFACTURER | MODEL | FAN DATA | | | | ELECTRICAL DATA | | | | WEIGHT | REMARKS |
|---|---|---|---|---|---|---|---|---|---|---|---|---|
| | | | TYPE | CFM | S. P. ("WC) | FILTER | HP | V-Φ-HZ | MOCP | MCA | LBS. | |
| FC 1 | IST.COMPANY | 19 HX | HORIZONTAL | 580 | 0.3 | FILTER ON GRILLES | 1/8 | 208-1-60 | - | 2.0 TOT. AMPS. | 80 | PROVIDE FACTORY GRILLED ACCESS DOOR NEOPRENE PAD ON (4) SIDES |
| FC 2 | IST.COMPANY | 25 HX | HORIZONTAL | 800 | 0.3 | FILTER ON GRILLES | 1/4 | 208-1-60 | - | 2.0 TOT. AMPS. | 95 | PROVIDE FACTORY GRILLED ACCESS DOOR NEOPRENE PAD ON (4) SIDES |
| FC 3 | IST.COMPANY | 30 HX | HORIZONTAL | 900 | 0.3 | FILTER ON GRILLES | 1/4 | 208-1-60 | - | 2.0 TOT. AMPS. | 125 | PROVIDE FACTORY GRILLED ACCESS DOOR NEOPRENE PAD ON (4) SIDES |
| | | | | | | | | | | | | |

* VERIFY VOLTAGE PRIOR TO ORDER EQUIPMENT

## HEAT PUMP CONDENSING UNIT

| SYMBOL | MANUFACTURER | MODEL | Cooling | | | Heating | | ELECTRICAL | | | REFRIGERANT PIPING | | | | WEIGHT | REMARKS |
|---|---|---|---|---|---|---|---|---|---|---|---|---|---|---|---|---|
| | | | CAPACITY @ 95° F AMB. TEMP. | | COOLING EFFICIENCY | CAPACITY | HEATING EFFICIENCY | | | | 0 TO 60 FT | | LONG LINE APP. (MAX. DIA.) * | | LBS. | |
| | | | MBH TOTAL | MBH SENSIBLE | SEER | MBH TOTAL | HSPF | V1Φ-HZ | MAX. MOCP | MCA | SUCTION | LIQUID | SUCTION | LIQUID | | |
| HP 1 | BRYANT | 213RNA018 | 17.1 | 13.2 | 13.0 | 18.0 | 8.0 | 208-1Φ | 20 | 11.7 | 5/8 | 3/8 | - | - | 180 | PROVIDE PAD & SEISMIC RESTRAINT |
| HP 2 | BRYANT | 213RNA024 | 22.6 | 17.7 | 13.0 | 23.8 | 7.9 | 208-1Φ | 25 | 14.8 | 5/8 | 3/8 | 3/4 | 3/8 | 230 | PROVIDE PAD & SEISMIC RESTRAINT |
| HP 3 | BRYANT | 213RNA030 | 28.4 | 19.9 | 13.0 | 30.0 | 8.1 | 208-1Φ | 30 | 19.2 | 3/4 | 3/8 | 3/4 | 3/8 | 250 | PROVIDE PAD & SEISMIC RESTRAINT |

* FOR TUBE SETS BETWEEN 50 AND 175 FT, CONSULT THE RESIDENTIAL SPLIT SYSTEM LONG LINE APPLICATION GUIDELINE.

## FAN SCHEDULE

| SYMBOL | MANUFACTURER | MODEL | SERVICE | TYPE | FAN DATA | | | ELECTRICAL DATA | | WEIGHT | REMARKS |
|---|---|---|---|---|---|---|---|---|---|---|---|
| | | | | | CFM | S. P. | FAN RPM | HP OR WATTS | V-Φ-HZ | LBS. | |
| EF 1 | GREENHECK | SP-B90 | BATHROOMS | CEILING FAN | 75 | 0.25 | 900 | 54 W | 120-1Φ | 15 LBS | W/ INTEGRATED BACK DRAFT DAMPER, INTERLOCK WITH LIGHT SWITCH (COORDINATE WITH ELECT). |
| EF 2 | GREENHECK | BSQ-80 | ELEV. ROOM | CEILING FAN | 600 | 0.25 | 1643 | 1/4 | 120-1Φ | 120 LBS | W/ INTEGRATED BACK DRAFT DAMPER, INTERLOCK WITH ROOM LINE VOLTAGE T-STAT (COORDINATE WITH ELECT). |
| EF 3 | GREENHECK | BSQ-90 | RUBISH ROOM | CEILING FAN | 800 | 0.25 | 1524 | 1/4 | 120-1Φ | 130 LBS | W/ INTEGRATED BACK DRAFT DAMPER, OPERATE PER BUILDING SCHEDULE (COORDINATE WITH ELECT). |
| EF 4 | NOT USED | - | - | - | - | - | - | - | - | - | - |
| EF 5 | GREENHECK | GB-081 | CORRIDOR VENT. | ROOFTOP | 550 | 0.5 | 1450 | 1/6 | 120-1Φ | 75 LBS | W/ INTEGRATED BACK DRAFT DAMPER & ROOF CURB |
| EF 6 | GREENHECK | GB-081 | CORRIDOR VENT. | ROOFTOP | 375 | 0.5 | 1221 | 1/6 | 120-1Φ | 75 LBS | W/ INTEGRATED BACK DRAFT DAMPER & ROOF CURB |
| EF 7 | GREENHECK | CSP-A390 | CORRIDOR VENT. | CEILING | 300 | 0.375 | 1350 | 144 W | 120-1Φ | 25 LBS | W/ INTEGRATED BACK DRAFT DAMPER |
| GEF 1 | GREENHECK | QEI-36-11 | GARAGE EXHAUST | MIXED FLOW | 40,250 | 1.25 | 1377 | 30 | 230-3Φ-60 | 1750 LBS | W/ INTEGRATED BACK DRAFT DAMPER, SEISMIC BRACING OPERATE BY CO DETECTION SYS. (COORDINATE W/ ELECT). |
| GEF 2 | GREENHECK | QEI-24-1 | GARAGE EXHAUST | MIXED FLOW | 16,000 | 1.0 | 1655 | 7 1/2 | 230-3Φ-60 | 600 LBS | W/ INTEGRATED BACK DRAFT DAMPER, SEISMIC BRACING OPERATE BY CO DETECTION SYS. (COORDINATE W/ ELECT). |
| GEF 3 | GREENHECK | QEI-24-1 | GARAGE EXHAUST | MIXED FLOW | 16,000 | 1.0 | 1655 | 7 1/2 | 230-3Φ-60 | 600 LBS | W/ INTEGRATED BACK DRAFT DAMPER, SEISMIC BRACING OPERATE BY CO DETECTION SYS. (COORDINATE W/ ELECT). |
| SF 1 | GREENHECK | QEI-36 | GARAGE VENT. | MIXED FLOW | 40,250 | 1.25 | 1377 | 30 | 230-3Φ-60 | 1750 LBS | W/ INTEGRATED BACK DRAFT DAMPER, SEISMIC BRACING OPERATE BY CO DETECTION SYS. (COORDINATE W/ ELECT). |
| SF 2 | GREENHECK | BSQ-80 | LAUNDRY ROOM | CEILING FAN | 600 | 0.25 | 1643 | 1/4 | 120-1Φ | 120 LBS | W/ INTEGRATED BACK DRAFT DAMPER |
| SF 3 | CAPTIVEAIRE | DMVA14FA | COORIDOR VENT | ROOF SUPPLY | 524 | 0.45 | 1100 | 1/6 | 120-1Φ | 60 LBS | W/ BACK DRAFT DAMPER |
| SF 4 | CAPTIVEAIRE | DMVA14FA | COORIDOR VENT | ROOF SUPPLY | 524 | 0.45 | 1100 | 1/6 | 120-1Φ | 60 LBS | W/ BACK DRAFT DAMPER |

* VERIFY VOLTAGE PRIOR TO ORDER EQUIPMENT

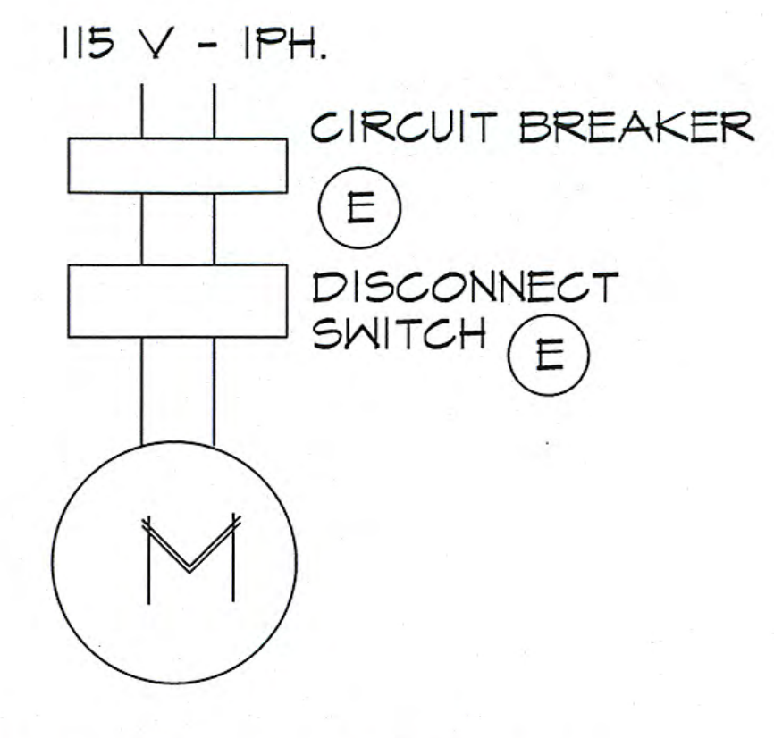

EF-1 AND EF-5 TO OPERATE
W/ BATHROOM LIGHT

EX. FAN WIRING DIAGRAM

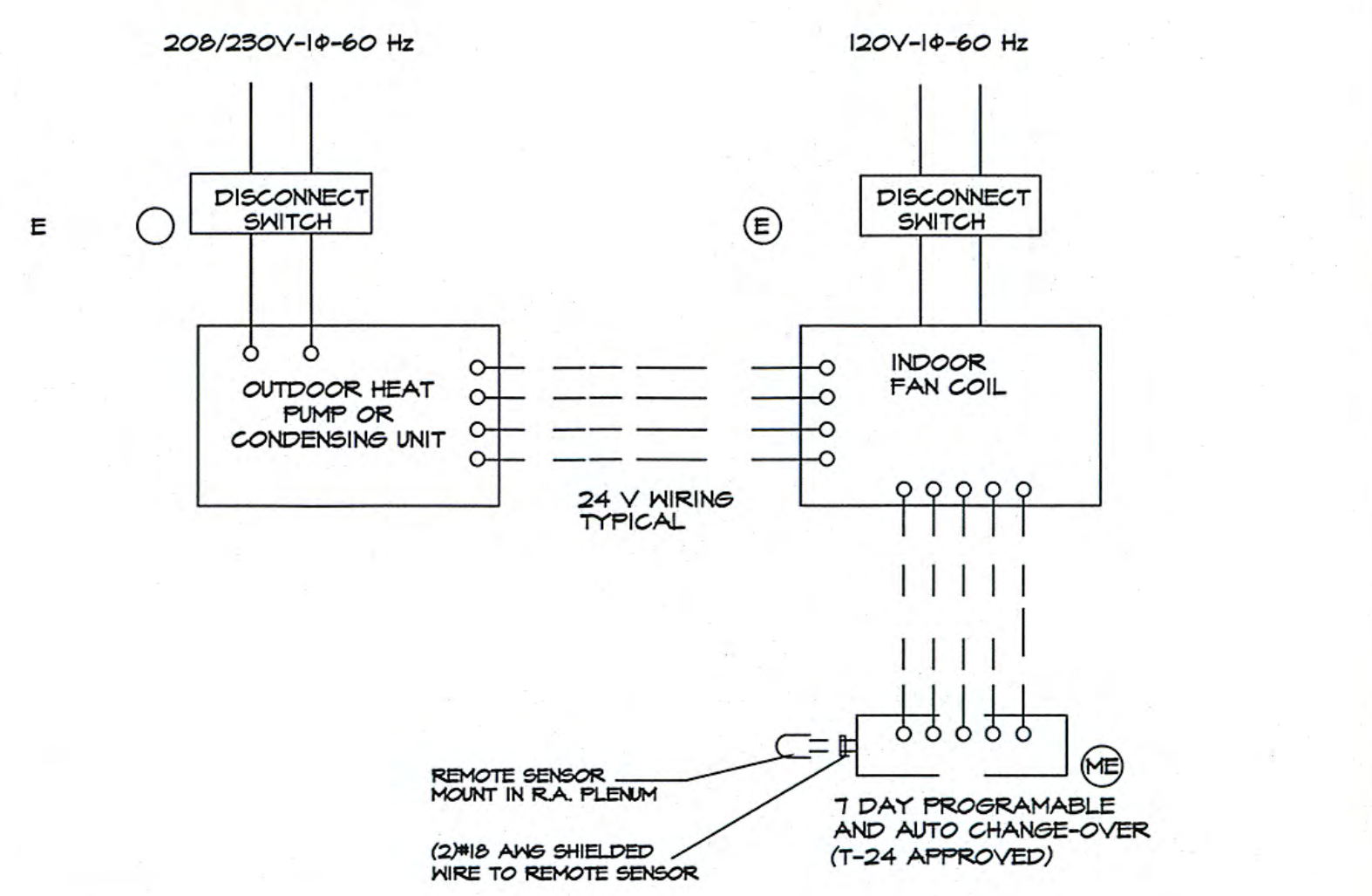
208/230V-1Φ-60 Hz
120V-1Φ-60 Hz
E
DISCONNECT SWITCH
E
DISCONNECT SWITCH
OUTDOOR HEAT PUMP OR CONDENSING UNIT
INDOOR FAN COIL
24 V WIRING TYPICAL
REMOTE SENSOR MOUNT IN R.A. PLENUM
(2)#18 AWG SHIELDED WIRE TO REMOTE SENSOR
ME
7 DAY PROGRAMABLE AND AUTO CHANGE-OVER (T-24 APPROVED)

SPLIT AC SYS. WIRING DIAGRAM

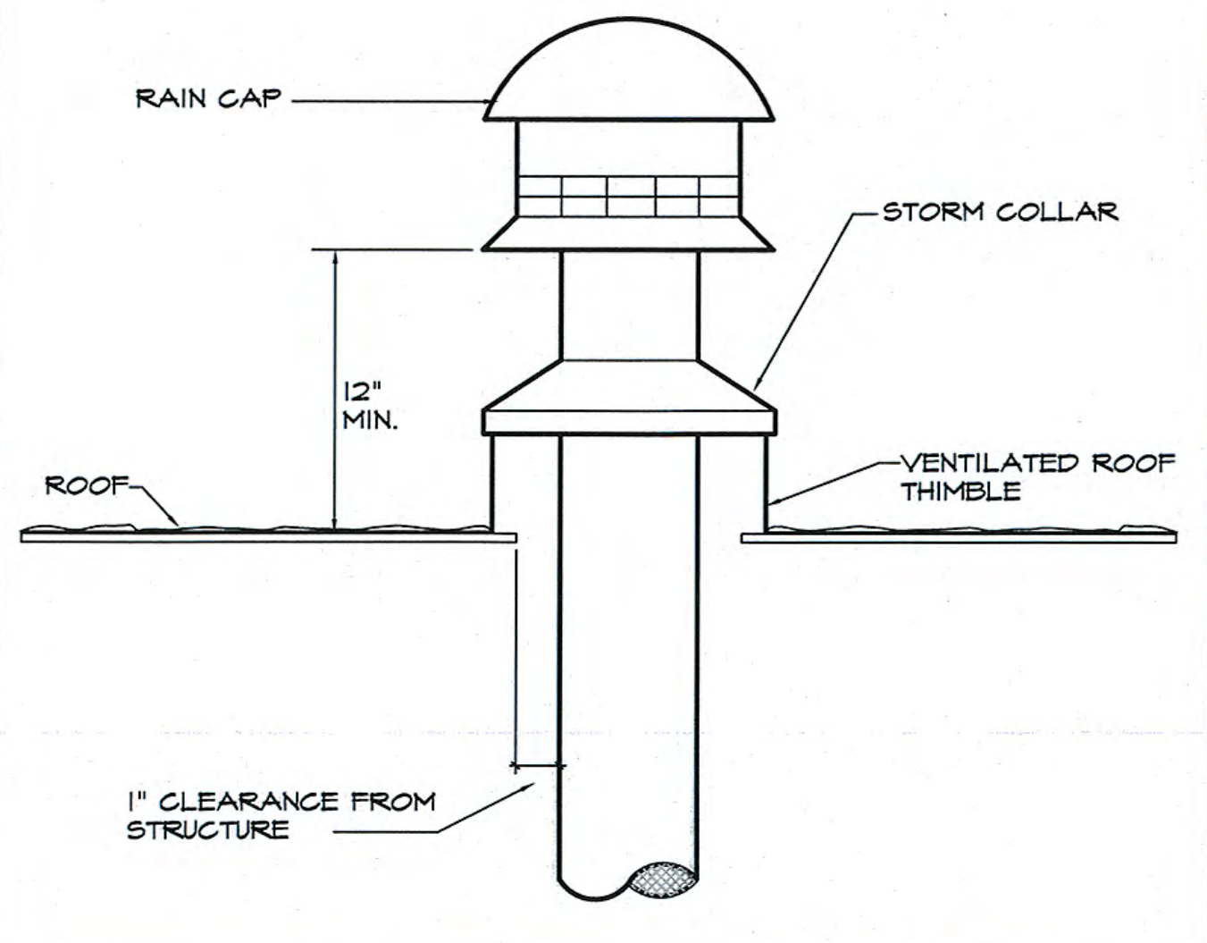

FLUE THRU ROOF DETAIL

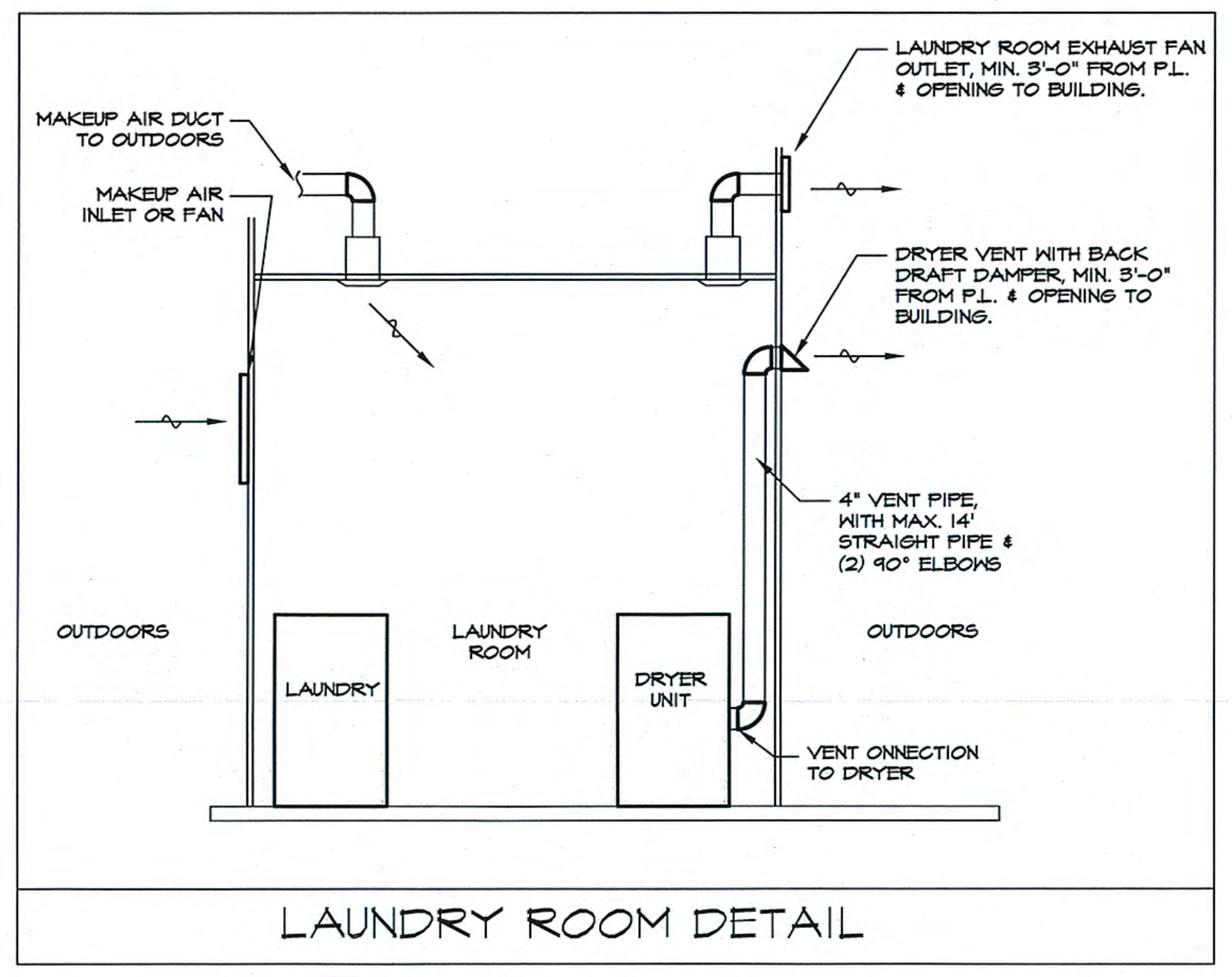
MAKEUP AIR DUCT TO OUTDOORS
MAKEUP AIR INLET OR FAN
LAUNDRY ROOM EXHAUST FAN OUTLET, MIN. 3'-0" FROM P.L. & OPENING TO BUILDING.
DRYER VENT WITH BACK DRAFT DAMPER, MIN. 3'-0" FROM P.L. & OPENING TO BUILDING.
4" VENT PIPE, WITH MAX. 14' STRAIGHT PIPE & (2) 90° ELBOWS
OUTDOORS
LAUNDRY ROOM
OUTDOORS
LAUNDRY
DRYER UNIT
VENT ONNECTION TO DRYER

LAUNDRY ROOM DETAIL

## TITLE 24 NOTES

MANDATORY REQUIREMENTS FOR PACKAGED AIR CONDITIONERS WITH GAS FURNACES OR HEAT PUMPS

1. ALL PACKAGED AIR CONDITIONING EQUIPMENT SHALL BE CERTIFIED TO COMPLY WITH THE CURRENT CALIFORNIA BUILDING AND APPLIANCE EFFICIENCY STANDARDS, TITLES 20 & 24.
2. OUTSIDE VENTILATION SHALL BE PROVIDED TO ALL CONDITIONED SPACE AT A RATE OF 0.15 CFM/SF OR 15 CFM/PERSON, WHICHEVER IS GREATER.
3. A THERMOSTAT SHALL BE PROVIDED TO EACH ZONE TO CONTROL HEATING AND COOLING. THE HEATING SETPOINT SHALL BE ADJUSTABLE DOWN TO 55°F OR LOWER, AND THE COOLING SETPOINT TO 85°F OR HIGHER. THE THERMOSTAT SHALL BE MANUALLY SWITCHED BETWEEN HEATING AND COOLING.
4. VENTILATION AIR SHALL BE PROVIDED AT LEAST 55 MINUTES OUT OF EVERY 60 MINUTES. THE AUTO/ON FAN SWITCH SHALL BE SET IN THE ON POSITION.
5. SYSTEM CONTROLS SHALL INCLUDE THE FOLLOWING FEATURES: A) AN AUTOMATIC TIME SWITCH, CERTIFIED BY THE STATE ENERGY COMMISSION SHALL START AND STOP THE AIR CONDITIONING EQUIPMENT. B) AN ACCESSIBLE MANUAL OVERRIDE TIMER WITH 0 TO 4 HOURS SHALL BE PROVIDED. THE CONTROLS MUST START THE SYSTEM ONE HOUR AHEAD OF OCCUPANCY IN ORDER TO PURGE THE BUILDING. THE CONTROLS MUST RESTART THE SYSTEM DURING UNOCCUPIED TIMES TO MAINTAIN HEATING SETBACK/COOLING SETPOINTS. SETBACK CONTROLS ARE NOT REQUIRED FOR OUTSIDE DESIGNS ABOVE 32°F (WINTER) AND BELOW 100°F (SUMMER).
6. OUTSIDE AIR SUPPLY AND EXHAUST EQUIPMENT SHALL HAVE DAMPERS THAT AUTOMATICALLY CLOSE DURING PERIODS OF EQUIPMENT SHUT DOWN.
7. HEAT PUMP CONTROLS SHALL PREVENT SUPPLEMENTARY HEATERS FROM OPERATING WHEN THE HEATING LOAD CAN BE MET BY THE HEAT PUMP ALONE AND SHALL HAVE CUT-ON AND CUT-OFF TEMPERATURES FOR THE COMPRESSION HEATING ARE HIGHER THAN THE TEMPERATURES FOR SUPPLEMENTARY HEATING.
8. DUCTS SHALL BE CONSTRUCTED AND INSTALLED IN ACCORDANCE WITH LATEST EDITION OF LA CITY MECHANICAL CODE & U.L. 181 STDS. DUCTS SHALL BE SEALED IN ACCORDANCE WITH SMACNA HVAC DUCT CONSTRUCTION STANDARDS METAL & FLEXIBLE, 1994. PRESSURE SENSITIVE TAPE MAY BE USED FOR SEALING DUCTS OPERATING AT LESS THAN 1 INCH WATER COLUMN PRESSURES.
9. DUCTS SHALL BE INSULATED IN COMPLIANCE WITH CHAPTER 6 CALIFORNIA MECHANICAL CODE AND U.L. 181 STANDARDS.
10. THE AIR DISTRIBUTION SYSTEM SHALL BE BALANCED IN ACCORDANCE WITH THE ASSOCIATED AIR BALANCE COUNCIL NATIONAL STANDARDS 1986. A WRITTEN COPY OF THE BALANCE REPORT SHALL BE SIGNED BY THE TESTING PERSONNEL AND BE GIVEN TO THE OWNER AND BUILDING INSPECTOR. (TO VERIFY THE PROPER AMOUNT OF OUTSIDE AIR TO COMPLY WITH TITLE 24 CALCULATIONS, BEFORE FINAL OF THIS PROJECT).

## AIR CONDITIONING LEGEND

| SYMBOL | DESCRIPTION |
|---|---|
| 12" x 12"<br>500 | CEILING DIFFUSER, NECK SIZE, IN. Φ<br>AIR QUANTITY CFM |
| ──── | SOLID LINE DENOTES NEW DUCTWORK |
| - - - - | DASHED LINE DENOTES EXISTING DUCTWORK TO REMAIN. |
| ⫽⫽⫽⫽ | CROSS-HATCHED LINE DENOTES EXISTING DUCTWORK TO BE REMOVED. |
| ⊠ | SUPPLY AIR DUCT. |
| ◫ | RETURN AIR DUCT. |
| ⊠ | EXHAUST AIR DUCT. |
| 12 X 6 | DUCT (FIRST DIMENSION IS SIDE SHOWN). |
| 12 X 6 (L) | LINED DUCT (SHEET METAL SIZE SHOWN). |
| | AUTOMATIC FIRE DAMPER |
| M.V.D. | MANUAL VOLUME DAMPER |
| M.D. | MOTORIZED DAMPER |
| | DOUBLE THICKNESS TURNING VANES |
| ⊠ | CEILING DIFFUSER |
| ◫ | RETURN AIR GRILLE, RELIEF GRILLE |
| ⊠ | EXHAUST GRILLE |
| S.D. | SMOKE DETECTOR |
| | MOTORIZED COMBINATION/SMOKE FIRE DAMPER |
| S.A. | SUPPLY AIR |
| R.A. | RETURN AIR |
| E.A. | EXHAUST AIR |
| O.S.A. | OUTSIDE AIR |
| U.T.R. | UP THRU ROOF |
| C.D. | CEILING DIFFUSER |
| R.A.G.<br>R.G. | RETURN AIR GRILLE, RELIEF GRILLE |
| E.G. | EXHAUST GRILLE |
| H.W.S. & R. | HOT WATER SUPPLY AND RETURN |
| C.W.S. & R. | CONDENSER WATER SUPPLY AND RETURN |
| (T) | THERMOSTAT (MOUNT AT 42 IN. ABOVE FLOOR). |
| (M) | EQUIPMENT FURNISHED AND INSTALLED BY MECH. CONTRACTOR. |
| (E) | EQUIPMENT FURNISHED AND INSTALLED BY ELECTR. CONTRACTOR |
| (ME) | EQUIPMENT FURNISHED BY MECH. CONTRACTOR AND INSTALLED BY ELECTR. CONTRACTOR. |
| ◐ | POINT OF CONNECTION FROM EXISTING DUCTWORK TO NEW DUCTWORK |
| (S) | ROOM SENSOR (MOUNT AT 60" A.F.F.) |
| (CO) | GARAGE VENTILATION CO DETECTOR |
| | |
| | |
| | |
| | |

LEGEND1

## GENERAL NOTES:

1. ALL FAN COILS ARE HORIZONTAL CONCEALED UNITS INSTALLED ABOVE GYP-BOARD CEILING.
2. ALL RETURN AIR GRILLES TO BE PART OF HINGED ACCESS PANEL UNDER THE UNIT W/FILTER.
3. OUTSIDE AIR VENTILATION SOURCE ACHIEVED BY NATURAL DRAFT THROUGH OPERABLE WINDOWS.
4. PRIMARY AND SECONDARY CONDENSATE DRAINS SHALL BE ROUTED TO APPROVED RECEPTORS. (ALL DRAIN PIPING, CONNECTIONS AND CONNECTING FITTINGS SHALL BE BY PLUMBING CONTR.)
5. DUCTWORK SHALL BE CONSTRUCTED AND INSTALLED IN ACCORDANCE WITH THE MOST CURRENT VERSION OF THE CALIFORNIA MECHANICAL CODE - CHAPTER 6. AND U.L. 181 STANDARDS.
6. RANGE OVENS FOR UNITS ARE RESIDENTIAL TYPE WITH SELF-CONTAINED HOODS.
7. ALL BEDROOM DOORS SHALL HAVE 1" UNDERCUT TO ALLOW RETURN AIR THROUGH.

## PLAN CHECK NOTE:

MATERIALS EXPOSED WITHIN DUCTS OR PLENUMS SHALL HAVE A FLAME-SPREAD INDEX OF NOT MORE THAN 25 AND SMOKE-DEVELOPED RATING OF NOT MORE THAN 50 WHEN TESTED IN ACCORDANCE WITH UBC STANDARD 8-1.

## ACCEPTANCE TEST REQUIREMNTS:

HVAC & AIR BLALNCE CONTRACTOR SHALL PERFORM THE SELECTED ACCEPTANCE TESTS PART OF THE FOLLOWING LIST & INCLUDE TEST RESULTS IN TEST & BALANCE REPORT. REFER TO CHAPTER 8 OF 2005 NONRESIDENTIAL MANUAL FOR TEST DETAILS.

☒ SECTION, 8.6.4 TEST PROCEDURE: NJ.3.2 CONSTANT VOLUME SYSTEMS OUTDOOR AIR ACCEPTANCE, USE FORM MECH-2-A

☒ SECTION, 8.6.6 TEST PROCEDURE: NJ.4.1 CONSTANT VOLUME PACKAGED HVAC SYSTEMS ACCEPTANCE, USE FORM MECH-3-A

☒ 8.6.10 TEST PROCEDURE: NJ.5.1 AIR DISTRIBUTION ACCEPTANCE, USE FORM MECH-5-A

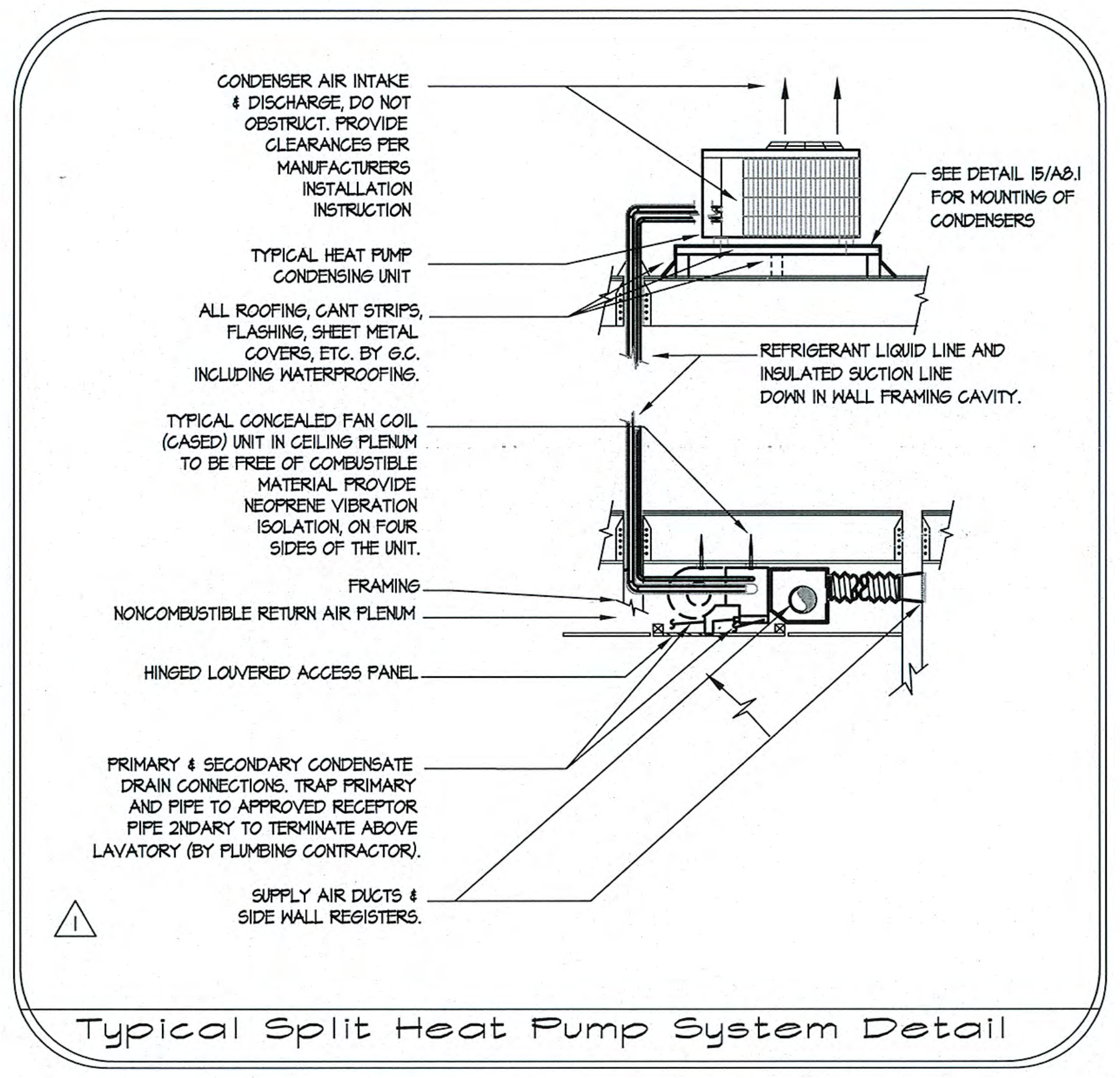
CONDENSER AIR INTAKE & DISCHARGE, DO NOT OBSTRUCT. PROVIDE CLEARANCES PER MANUFACTURERS INSTALLATION INSTRUCTION
TYPICAL HEAT PUMP CONDENSING UNIT
ALL ROOFING, CANT STRIPS, FLASHING, SHEET METAL COVERS, ETC. BY G.C. INCLUDING WATERPROOFING.
TYPICAL CONCEALED FAN COIL (CASED) UNIT IN CEILING PLENUM TO BE FREE OF COMBUSTIBLE MATERIAL PROVIDE NEOPRENE VIBRATION ISOLATION, ON FOUR SIDES OF THE UNIT.
FRAMING
NONCOMBUSTIBLE RETURN AIR PLENUM
HINGED LOUVERED ACCESS PANEL
PRIMARY & SECONDARY CONDENSATE DRAIN CONNECTIONS. TRAP PRIMARY AND PIPE TO APPROVED RECEPTOR PIPE 2NDARY TO TERMINATE ABOVE LAVATORY (BY PLUMBING CONTRACTOR).
SUPPLY AIR DUCTS & SIDE WALL REGISTERS.
SEE DETAIL 15/A8.1 FOR MOUNTING OF CONDENSERS
REFRIGERANT LIQUID LINE AND INSULATED SUCTION LINE DOWN IN WALL FRAMING CAVITY.

Typical Split Heat Pump System Detail

## AIR CONDITIONING NOTES

1. FABRICATE ALL DUCTS PER THE LATEST EDITION OF LA CITY MECHANICAL CODE. USE "S AND DRIVERS" FOR JOINTS, "PITTTSBURG" SEAMS. SEAL JOINTS WITH ARABOL AND CANVAS TAPE. FABRICATE DUCTS WITH GALVANIZED SHEET METAL.
2. ALL EXPOSED DUCTS SHALL BE LINED WITH FIBERGLASS LINER, 1-1/2" THICK C.S.G. ULTRA LINER (R=6). WRAP ALL OTHER S.A. AND R.A. DUCTS WITH FIBERGLASS BLANKET, D.S.G. #1001,1" THICK (R=4.0). ATTACH LINER WITH DISC AND SPINDLES AND ADHESIVE, ATTACH BLANKET WITH #10 SOFT ANNEALED WIRE 12" O.C.
3. PROVIDE TURNING VANES IN ALL 90° ELBOW SUPPLY AND RETURN AIR DUCTS.
4. PLUMBING CONTRACTOR TO PROVIDE CONDENSATE DRAIN PIPE COPPER TYPE "M" WITH 3/4" TRAP TO APPROVED RECEPTOR.
5. ALL CEILING DIFFUSERS SHALL BE MODULAR MODEL NO. 1240 MANUFACTURED BY KRUEGER OR EQUAL.
6. SIDE WALL SUPPLY GRILLES TO BE MODEL # 880/5880V (DOUBLE DEFLECTION) MANUFACTURED BY KRUEGER OR EQUAL. W/O.B.D.'S
7. RETURN, TRANSFER & EXHAUST AIR GRILLES SHALL BE BAR-TYPE MANUFACTURED BY KRUEGER OR EQUAL.
8. ALL COMBUSTIBLE MATERIALS SHALL HAVE A FLAME SPREAD <25, SMOKE SPREAD <50.
9. FINAL DUCT CONNECTION TO GRILLES SHALL BE CASCO SILENT FLEX II, MAXIMUM 7 FT. LENGTH WITH FACTORY END.
10. ALL H.V.A.C. EQUIPMENT AND DUCTS SHALL BE PER CITY OF LA MECHANICAL CODE 2002 EDITION.
11. A.C. CONTRACTOR SHALL PROVIDE THE ARCHITECT WITH 3 COPIES OF CERTIFIED AIR BALANCE REPORT FOR FINAL APPROVAL.
12. ALL CEILING DIFFUSERS MOUNTED ON HARD BOARD CEILING TO BE PROVIDED W/OBD'S.
13. VERIFY EQUIPMENT VOLTAGE FROM ELEC. CONT. PRIOR TO ORDER.
14. PROVIDE ACCESS FOR FUTURE SERVICE FOR ALL EQUIPMENT PER CA MC.

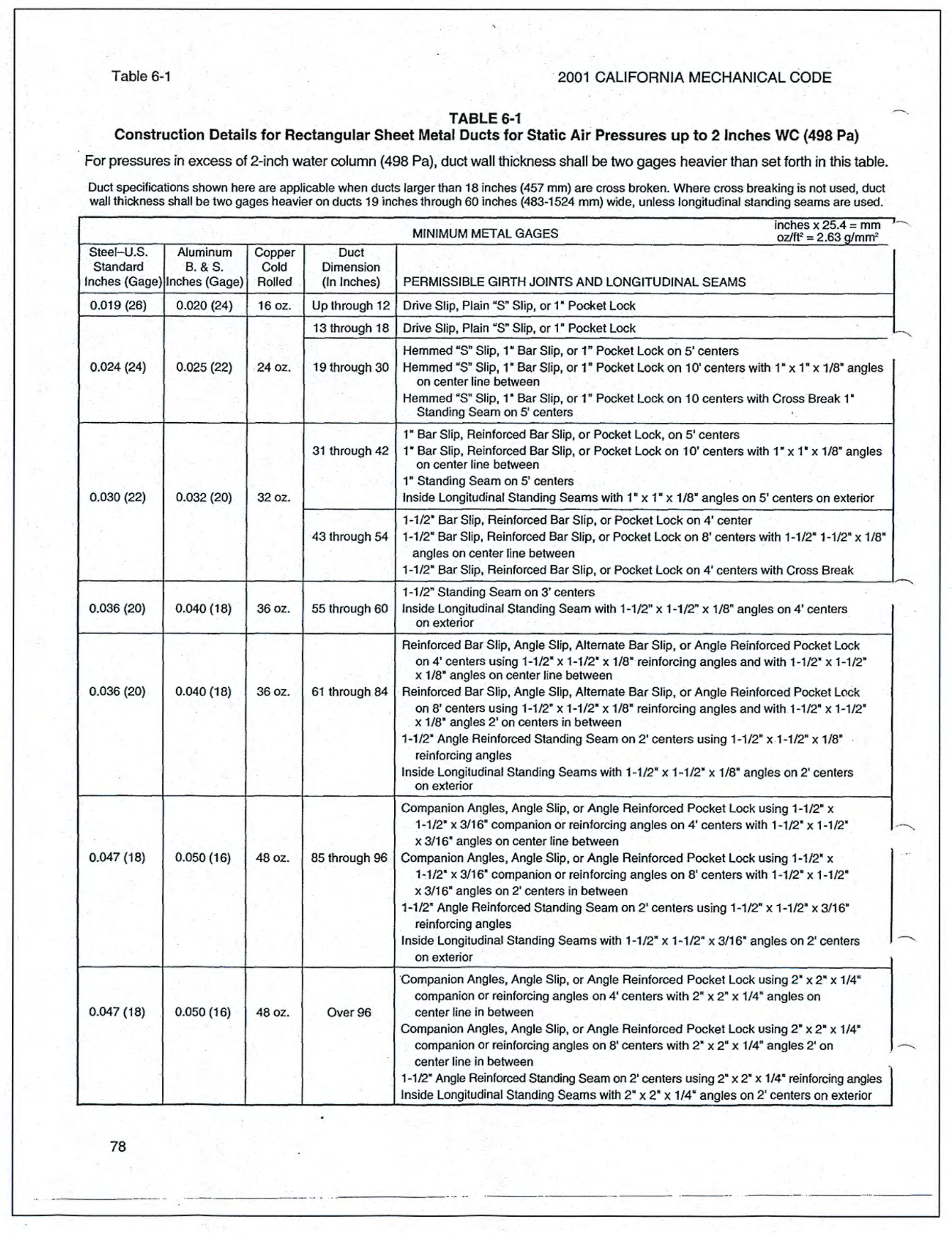

Table 6-1 2001 CALIFORNIA MECHANICAL CODE

**TABLE 6-1**
**Construction Details for Rectangular Sheet Metal Ducts for Static Air Pressures up to 2 Inches WC (498 Pa)**

For pressures in excess of 2-inch water column (498 Pa), duct wall thickness shall be two gages heavier than set forth in this table.

Duct specifications shown here are applicable when ducts larger than 18 inches (457 mm) are cross broken. Where cross breaking is not used, duct wall thickness shall be two gages heavier on ducts 19 inches through 60 inches (483-1524 mm) wide, unless longitudinal standing seams are used.

| MINIMUM METAL GAGES | | | | inches x 25.4 = mm<br>oz/ft² = 2.63 g/mm² |
|---|---|---|---|---|
| Steel–U.S. Standard Inches (Gage) | Aluminum B. & S. Inches (Gage) | Copper Cold Rolled | Duct Dimension (In Inches) | PERMISSIBLE GIRTH JOINTS AND LONGITUDINAL SEAMS |
| 0.019 (26) | 0.020 (24) | 16 oz. | Up through 12 | Drive Slip, Plain "S" Slip, or 1" Pocket Lock |
| 0.024 (24) | 0.025 (22) | 24 oz. | 13 through 18 | Drive Slip, Plain "S" Slip, or 1" Pocket Lock |
| | | | 19 through 30 | Hemmed "S" Slip, 1" Bar Slip, or 1" Pocket Lock on 5' centers<br>Hemmed "S" Slip, 1" Bar Slip, or 1" Pocket Lock on 10' centers with 1" x 1" x 1/8" angles on center line between<br>Hemmed "S" Slip, 1" Bar Slip, or 1" Pocket Lock on 10 centers with Cross Break 1" Standing Seam on 5' centers |
| 0.030 (22) | 0.032 (20) | 32 oz. | 31 through 42 | 1" Bar Slip, Reinforced Bar Slip, or Pocket Lock, on 5' centers<br>1" Bar Slip, Reinforced Bar Slip, or Pocket Lock on 10' centers with 1" x 1" x 1/8" angles on center line between<br>1" Standing Seam on 5' centers<br>Inside Longitudinal Standing Seams with 1" x 1" x 1/8" angles on 5' centers on exterior |
| | | | 43 through 54 | 1-1/2" Bar Slip, Reinforced Bar Slip, or Pocket Lock on 4' center<br>1-1/2" Bar Slip, Reinforced Bar Slip, or Pocket Lock on 8' centers with 1-1/2" 1-1/2" x 1/8" angles on center line between<br>1-1/2" Bar Slip, Reinforced Bar Slip, or Pocket Lock on 4' centers with Cross Break |
| 0.036 (20) | 0.040 (18) | 36 oz. | 55 through 60 | 1-1/2" Standing Seam on 3' centers<br>Inside Longitudinal Standing Seam with 1-1/2" x 1-1/2" x 1/8" angles on 4' centers on exterior |
| 0.036 (20) | 0.040 (18) | 36 oz. | 61 through 84 | Reinforced Bar Slip, Angle Slip, Alternate Bar Slip, or Angle Reinforced Pocket Lock on 4' centers using 1-1/2" x 1-1/2" x 1/8" reinforcing angles and with 1-1/2" x 1-1/2" x 1/8" angles on center line between<br>Reinforced Bar Slip, Angle Slip, Alternate Bar Slip, or Angle Reinforced Pocket Lock on 8' centers using 1-1/2" x 1-1/2" x 1/8" reinforcing angles and with 1-1/2" x 1-1/2" x 1/8" angles 2' on centers in between<br>1-1/2" Angle Reinforced Standing Seam on 2' centers using 1-1/2" x 1-1/2" x 1/8" reinforcing angles<br>Inside Longitudinal Standing Seams with 1-1/2" x 1-1/2" x 1/8" angles on 2' centers on exterior |
| 0.047 (18) | 0.050 (16) | 48 oz. | 85 through 96 | Companion Angles, Angle Slip, or Angle Reinforced Pocket Lock using 1-1/2" x 1-1/2" x 3/16" companion or reinforcing angles on 4' centers with 1-1/2" x 1-1/2" x 3/16" angles on center line between<br>Companion Angles, Angle Slip, or Angle Reinforced Pocket Lock using 1-1/2" x 1-1/2" x 3/16" companion or reinforcing angles on 8' centers with 1-1/2" x 1-1/2" x 3/16" angles on 2' centers in between<br>1-1/2" Angle Reinforced Standing Seam on 2' centers using 1-1/2" x 1-1/2" x 3/16" reinforcing angles<br>Inside Longitudinal Standing Seams with 1-1/2" x 1-1/2" x 3/16" angles on 2' centers on exterior |
| 0.047 (18) | 0.050 (16) | 48 oz. | Over 96 | Companion Angles, Angle Slip, or Angle Reinforced Pocket Lock using 2" x 2" x 1/4" companion or reinforcing angles on 4' centers with 2" x 2" x 1/4" angles on center line in between<br>Companion Angles, Angle Slip, or Angle Reinforced Pocket Lock using 2" x 2" x 1/4" companion or reinforcing angles on 8' centers with 2" x 2" x 1/4" angles 2' on center line in between<br>1-1/2" Angle Reinforced Standing Seam on 2' centers using 2" x 2" x 1/4" reinforcing angles<br>Inside Longitudinal Standing Seams with 2" x 2" x 1/4" angles on 2' centers on exterior |

78

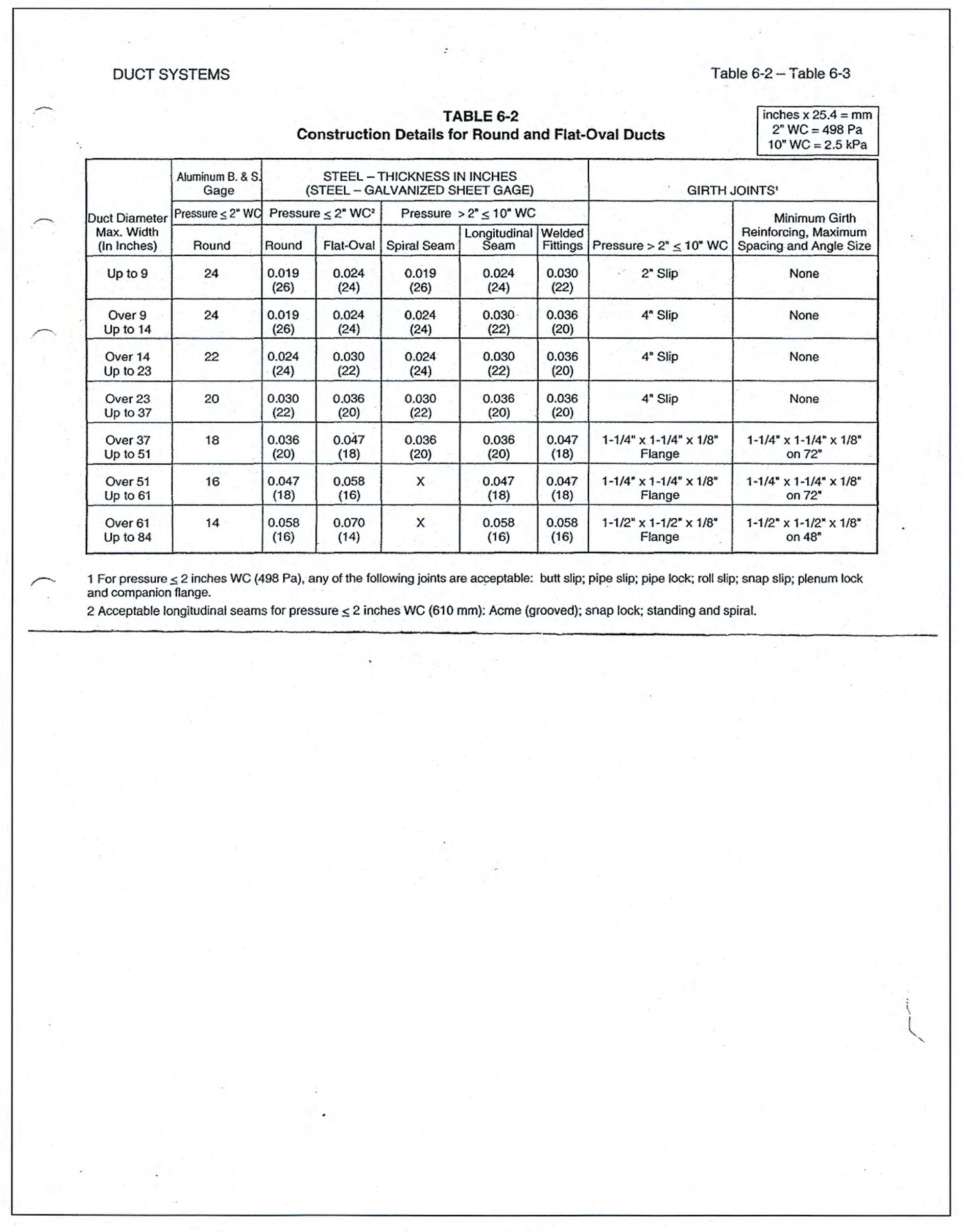

DUCT SYSTEMS Table 6-2 – Table 6-3

**TABLE 6-2**
**Construction Details for Round and Flat-Oval Ducts**

inches x 25.4 = mm
2" WC = 498 Pa
10" WC = 2.5 kPa

| Duct Diameter Max. Width (In Inches) | Aluminum B. & S. Gage | STEEL – THICKNESS IN INCHES (STEEL – GALVANIZED SHEET GAGE) | | | | | GIRTH JOINTS¹ | |
|---|---|---|---|---|---|---|---|---|
| | Pressure ≤ 2" WC | Pressure ≤ 2" WC² | | Pressure > 2" ≤ 10" WC | | | | Minimum Girth Reinforcing, Maximum Spacing and Angle Size |
| | Round | Round | Flat-Oval | Spiral Seam | Longitudinal Seam | Welded Fittings | Pressure > 2" ≤ 10" WC | |
| Up to 9 | 24 | 0.019 (26) | 0.024 (24) | 0.019 (26) | 0.024 (24) | 0.030 (22) | 2" Slip | None |
| Over 9 Up to 14 | 24 | 0.019 (26) | 0.024 (24) | 0.024 (24) | 0.030 (22) | 0.036 (20) | 4" Slip | None |
| Over 14 Up to 23 | 22 | 0.024 (24) | 0.030 (22) | 0.024 (24) | 0.030 (22) | 0.036 (20) | 4" Slip | None |
| Over 23 Up to 37 | 20 | 0.030 (22) | 0.036 (20) | 0.030 (22) | 0.036 (20) | 0.036 (20) | 4" Slip | None |
| Over 37 Up to 51 | 18 | 0.036 (20) | 0.047 (18) | 0.036 (20) | 0.036 (20) | 0.047 (18) | 1-1/4" x 1-1/4" x 1/8" Flange | 1-1/4" x 1-1/4" x 1/8" on 72" |
| Over 51 Up to 61 | 16 | 0.047 (18) | 0.058 (16) | X | 0.047 (18) | 0.047 (18) | 1-1/4" x 1-1/4" x 1/8" Flange | 1-1/4" x 1-1/4" x 1/8" on 72" |
| Over 61 Up to 84 | 14 | 0.058 (16) | 0.070 (14) | X | 0.058 (16) | 0.058 (16) | 1-1/2" x 1-1/2" x 1/8" Flange | 1-1/2" x 1-1/2" x 1/8" on 48" |

1 For pressure ≤ 2 inches WC (498 Pa), any of the following joints are acceptable: butt slip; pipe slip; pipe lock; roll slip; snap slip; plenum lock and companion flange.
2 Acceptable longitudinal seams for pressure ≤ 2 inches WC (610 mm): Acme (grooved); snap lock; standing and spiral.

## FIRE/SMOKE DAMPER SPECIFICATIONS:

ALL FIRE DAMPERS SHALL BE LABELED AND LISTED BY CALIFORNIA STATE FIRE MARSHAL AND/OR UNDERWRITERS LABORATORIES. ALL DAMPERS MUST ALSO BE LEAKAGE RATED AND LABLED UNDER UNDERWRITER LABORATORIES STD. 555S. WITH METAL SEALS ALLOWING NO MORE THAN 10 CFM/SQ.FT. AT 1" W.G. TO 250° F FOR A FULL 30 MIN. CAN BE MOTOR OPERATED. TORQUE REQ'D. TO MAINTAIN LEAKAGE RATE NOT TO EXCEED 0 LBS. TORQUE. DAMPERS SHALL BE INSTALLED PER MANUFACTURERS INSTALLATION INSTRUCTIONS AND/OR STATE FIRE MARSHAL LISTING NO. 03225. POTTORFF COMPANY, INC. (NO RUBBER SEALS ALLOWED) (LISTING NO.03225:0368:008 AND 03230:0368:105) PROVIDE NON STALL SHUNT MOTOR , 23 VA. MAXIMUM. OR APPROVED EQUAL.

FIRE DAMPER IS CONSISTENT WITH SMACNA'S FIRE DAMPER HEAT AND STOP GUIDE.

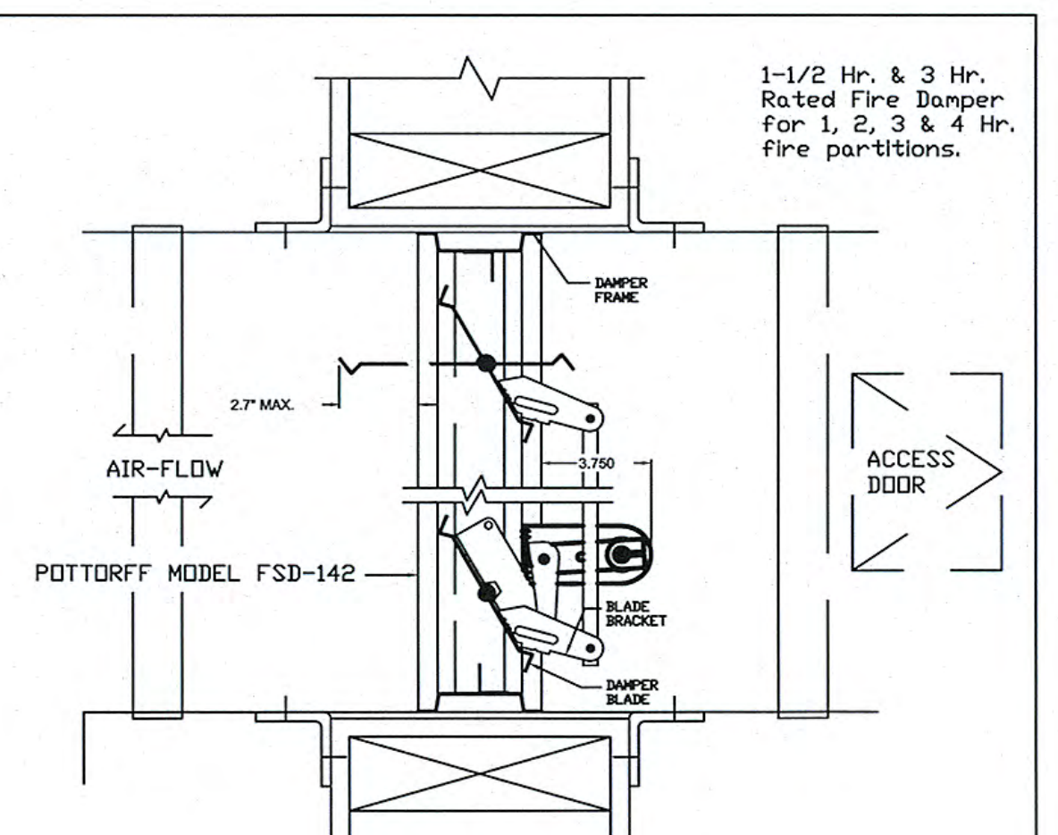

## COMBINATION FIRE/SMOKE DAMPER

OPENING TO BE SINGLE HEADER FRAMING FOR WOOD OR STEEL. WOOD FRAMED OPENINGS MUST BE LINED WITH MINIMUM 5/8" TYPE X GYP. BOARD. LINING NOT REQUIRED AT STEEL STUD, CONCRETE, OR MASONRY. SUGGESTED CLEARANCE BETWEEN SLEEVE AND OPENING 1/8" FOR EACH 12" DAMPER WIDTH AND HEIGHT FOR EXPANSION.
DAMPER TO BE HELD IN PLACE BY RETAINING ANGLES ATTACHED TO SLEEVE ON BOTH SIDES OF PARTITION, AND AROUND ENTIRE PERIMETER OF THE SLEEVE. ANGLES TO BE MIN. 16 GA. 1-1/2" X 1-1/2" OR LARGER AS REQUIRED TO PROVIDE A MIN. 1" OVERLAP OF THE OPENING. ANGLES MAY BE MITERED, BUTTED OR OVERLAPPED AT THE CORNERS. ATTACH ANGLES TO THE SLEEVE (NOT THE PARTITION) WITH SHEET METAL SCREWS, BOLTS OR WELDS AS PER MANUFACTURERS INSTRUCTIONS.
CONNECT DUCT TO SLEEVE WITH "S" TYPE SLIP CONNECTIONS.
DO NOT USE MECHANICAL FASTENERS.

## FIRE DAMPER SPECIFICATIONS:

ALL FIRE DAMPERS SHALL BE LABELED AND LISTED BY CALIFORNIA STATE FIRE MARSHAL AND/OR UNDERWRITERS LABORATORIES. ALL DAMPERS SHALL BE INSTALLED PER MANUFACTURERS INSTALLATION INSTRUCTIONS AND/OR STATE FIRE MARSHAL LISTING NO. 03225. POTTORFF COMPANY, INC. (LISTING NO.03225:0368:101) OR APPROVED EQUAL.
ALL FIRE DAMPERS ARE EQUIPPED WITH ADJSUTABLE SLEEVES.
U.L APPROVED FUSIBLE LINKS - 212° F (100° C) STD.
ALL FIRE DAMPERS TO BE EQUIPPED WITH ADJSUTABLE SLEEVES.

FIRE DAMPER IS CONSISTENT WITH SMACNA'S FIRE DAMPER HEAT AND STOP GUIDE.

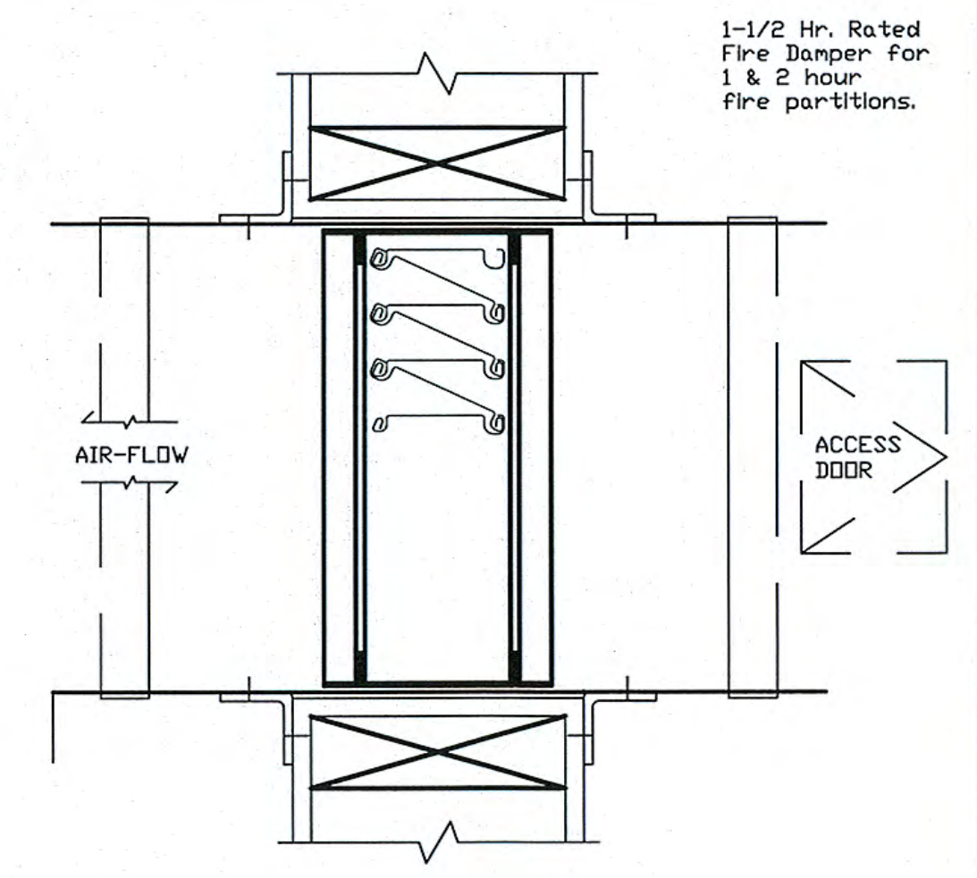

## WALL FIRE DAMPER

OPENING TO BE SINGLE HEADER FRAMING FOR WOOD OR STEEL. WOOD FRAMED OPENINGS MUST BE LINED WITH MINIMUM 5/8" TYPE X GYP. BOARD. LINING NOT REQUIRED AT STEEL STUD, CONCRETE, OR MASONRY. SUGGESTED CLEARANCE BETWEEN SLEEVE AND OPENING 1/8" FOR EACH 12" DAMPER WIDTH AND HEIGHT FOR EXPANSION.
DAMPER TO BE HELD IN PLACE BY RETAINING ANGLES ATTACHED TO SLEEVE ON BOTH SIDES OF PARTITION, AND AROUND ENTIRE PERIMETER OF THE SLEEVE. ANGLES TO BE MIN. 16 GA. 1-1/2" X 1-1/2" OR LARGER AS REQUIRED TO PROVIDE A MIN. 1" OVERLAP OF THE OPENING. ANGLES MAY BE MITERED, BUTTED OR OVERLAPPED AT THE CORNERS. ATTACH ANGLES TO THE SLEEVE (NOT THE PARTITION) WITH SHEET METAL SCREWS, BOLTS OR WELDS AS PER MANUFACTURERS INSTRUCTIONS.
CONNECT DUCT TO SLEEVE WITH "S" TYPE SLIP CONNECTIONS.
DAMPERS SHALL BE DYNAMICALLY RATED WHERE SPECIFIED.

VFD10-W

No. M31157
Expires 12/31/09
08/20/09

**DAVAR & ASSOC.**
CONSULTING ENGINEERS
12016 Telegraph Road, Suite 205
Santa Fe Springs, California 90670
Tel: (562) 777-8050 Fax: (562) 777-0933

jag architecture
15 HUBBLE IRVINE
CALIFORNIA 92618
(949) 752-9333
FAX (949) 752-1207

CONSULTANT

CLIENT

Saticoy Realty Investments, LLC
LOS ANGELES, CALIFORNIA

PROJECT

APARTMENT BUILDING
20223–20237 W. SATICOY STREET
WINNETKA, CALIFORNIA

DRAWING TITLE

EQUIPMENT SCHEDULE
NOTES & DETAILS

REVISION

3 03-18-09 P.C. REV.

STAMP

H. CIRUS JALLALI
No.C22382
Ren. 5-31-09

DATA

| | |
|---|---|
| DATE: | 07-20-2006 |
| DRAWN BY: | RM |
| J&G NO. | 030703 |
| SCALE: | AS NOTED |
| SHEET | |

M-1.0

ALL DRAWINGS AND WRITTEN MATERIAL APPEARING HEREIN CONSTITUTE THE ORIGINAL AND UNPUBLISHED WORK OF THE ARCHITECT AND THE SAME MAY NOT BE DUPLICATED, USED OR DISCLOSED WITHOUT THE WRITTEN CONSENT OF THE ARCHITECT.